LiGHT SKY

www.lightsky.com.cn

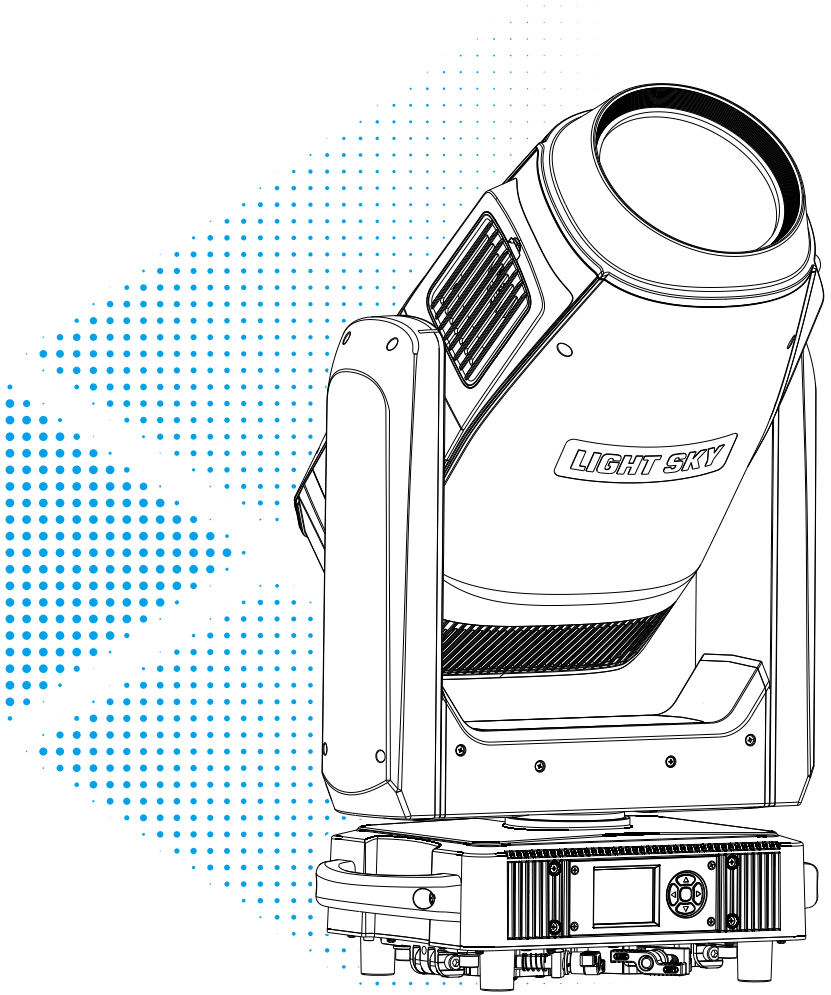

SUPER SCOPE PLUS

User Manual

Please read the instruction carefully before use

Fly Dragon Lighting Equipment Co., Ltd.

Add : NO.4 JINGNENG ROAD 1, HUADU DISTRICT, GUANGZHOU, CHINA.
Tel : 020-61828288 Fax : 020-61828188 Postal Code : 510820
Email : flydragon@lightsky.com.cn

Social Media

LiGHT SKY Wechat

CONTENTS

1、Safety Instructions....2

2、Technical Specifications....5

2.1、Attachment And Size....8

3、Color/pattern....9

3.1、Replacing Rotating Gobos....10

4、Control Panel....13

5、Connection and control....14

5.1、Power supply connection....14

5.2、DMX 512 Connection....15

6、How To Set The Unit....16

6.1、Main Function....16

6.2、Channel Setting....19

6.3、Address Setting....19

6.4、DMX 512 Configuration....20

7、 Electrical Connection Diagram....25

8、Troubleshooting....26

9、Fixture Cleaning....28

10、Duty exonerative and copyright protectio....28

Congratulations on choosing our company product! We thank you for your custom.

- Please keep in mind that this product, like other products of the company, adheres to the concept of people-oriented design and manufacture, and takes product quality as the foundation.
- We put the interests of customers first, and do our best to meet customer requirements.
- Please read this instruction manual carefully and keep it for future reference. In the case of fully understanding the product information, strictly abide by theUse the instruction manual to ensure that the product is installed, used and serviced correctly and safely.
- Our company is not responsible for any damage to lamps or other performance due to personal failure to follow the instructions during installation, use and maintenance.responsibility.
- Our company reserves the right to modify the manual at any time and without prior notice.

1.Safety Instructions

WARNING

Please read the instruction carefully which includes important information about the installation, usage and maintenance.

Please keep this User Manual for future consultation. If you sell the unit to another user, be sure that they also receive this manual.

The following symbols are used to identify important safety information on the product and in this manual:



WARNING! Safety hazard. Risk of severe injury or death.

WARNING! Refer to manual betore installing, powering or servicing.

WARNING! Hazardous voltage. Risk of severe or lethal electric shock.

WARNING! Fire hazard.

WARNING! Burn hazard. Hot surface.not touch.Do not touch

WARNING! Risk of eye injury.Safety glasses must be worn.

WARNING! Risk of hand injury.Safety gloves must be worn.

WARNING! Avoid direct eye contact



DANGER! Applies only to luiminaires directly mounted on surfaces of non-combustible materials

DANGER! Do not discard Trash can

DANGER! Mark of ground

DANGER! Replace all shatter shields

DANGER! Take a short distance from the object to be photographed (meters)

DANGER! Rated maximum ambient temperature

DANGER! Indoor use only

DANGER! Do not point the lens towards the sun or strong light

DANGER! Operation not allowed during runtime

Important:

Damages caused by the disregard of this user manual are not subject to warranty. The dealer will not accept liability for any resulting defects or problems.

— Unpack and check carefully to ensure that there is no transportation damage before using the unit.

— This product is for indoor use only. Use only in a dry location.

— Do install and operate by qualified operator.

— The light source in this luminaire should be replaced by the manufacturer or its service agent or a similarly qualified person, always cut off the power supply before replacing he light source.

— Do not allow children to operate the fixture.

— The unit must be installed in a location with adequate ventilation, at least 20cm from adjacent surfaces.

— Be sure that no ventilation slots is blocked, otherwise the unit will be overheated.

— Before operation, ensure that you are connecting this product to the proper voltage in accordance with the specifications in this manual or on the product's specification label.
— It's important to ground the yellow/green conductor to earth in order to avoid electric shock.
— Minimum ambient temperature Ta: -0°C. Maximum ambient temperature Ta: 40°C.
— Do not operate this product at a lower or higher temperature.
— Do not connect the device to any dimmer pack.
— When the lamp is running, do not place combustible objects next to it. The shortest distance between the device and inflammable and explosive objects or materials is 50cm.
— Make sure the power cord is not crimped or damaged; replace it immediately if damaged.
— Unit's surface temperature may reach up to 80°C. Do not touch the housing bare-handedduring its operation.
— Avoid any flammable liquids, water or metal from entering the unit. Once it happens, cut off the mains power immediately.
— Do not operate in a dirty or dusty environment. Do clean the fixture regularly.
— Do not touch any wire during operation as there might be a hazard of electric shock.
— Avoid entanglement of the power cord with other wires.
— The minimum distance to objects/surface must be more than 3 meters.
— In the event of serious operating problem, stop using the unit immediately.
— Never turn on and off the unit time after time.
— The housing, the lenses, or the ultraviolet filter must be replaced if they are visibly damaged.
— Do not open the housing as there are no user serviceable parts inside.
— Do not attempt to operate this unit if it becomes damaged. Do not attempt any repairs yourself. Repairs carried out by unskilled people can lead to damage or malfunction. Please contact the nearest authorized technical assistance center if needed.
— Disconnect this product from its power source before servicing.
— Do use the original packaging if the device is to be transported.
— Avoid direct eye exposure to the light source while the product is on.
— Do not operate this product if you see damage on the housing, shields, or cables. Have the damaged parts replaced by an authorized technician at once.

Nstallation:

The luminaire must be securely fastened to the quick-lock hook with screws to prevent vibration or slipping during operation. The supporting structure must be able to withstand 6 times the weight of the luminaire. Additionally, a safety cable must be installed that can endure 30 free-fall drops from 300mm without failure. Installation should only be performed by qualified professionals, and the luminaire must be mounted in an area inaccessible to unauthorized personnel or away from pedestrian traffic.

2.Technical Specifications

OPTICS

- Light source: 880W white LED module
- Zoom range: 5.5° -52 °
- Optical lens: coated with high anti-reflection film, ϕ180mm
- Color temperature: 6800 K
- Color rendering index: RA≥71 / RA≥90 (Cutting into high resolution digital filters)
- Total light output flux: 41000 Lm
- LED source life expectancy: 50000 hours

(*LED source life depends on several factors, including but not limited to:environmental conditions, control dimming, power supply and voltage, switchingcycle, fixture mode, etc.)

COLOR

- CMY infinite color mixing
- CTO color temperature linear adjustment： 2800K-6800K.
- 5 color chips+white light+CRI, can achieve bidirectional color rainbow, dual color step gradient (linear movement), color wheel bidirectional rotation, random color mode

PATTERN

- 2 rotating gobo wheels, 14 glass gobo pieces, the overlay effect is full of dynamics, pluggable and replaceable, and can realize the effects of rotation, flowing water and shaking.
- Rotary disk A: 7 kinds of glass patterns + white circle, the outer diameter of the gobo is 26.9mm, and the inner diameter of the gobo is 21.5mm.
- Rotary disc B: 7 kinds of glass patterns + white circle, the outer diameter of the gobo is 26.9mm, and the inner diameter of the gobo is 21.5mm.
- Dynamic effect plate
- Eight-way cutting: 4 gratings to achieve fast and smooth cutting, eight cutting directions and angles can be controlled separately, each single piece can achieve complete light closure,The whole cutting module can be rotated by ±55°.

EFFECT

- Four prisms + four rows of mirrors, can rotate in two directions, can be switched independently, can be superimposed
- Heavy atomization + light atomization, can be switched independently, can be superimposed.
- With electric aperture, 5-100% linear adjustment, with macro function multi effect change
- Electronic dimming, 0-100% linear dimming, uniform spot
- Electronic strobe speed is 1-25 times/S
- LED refresh frequency: 1000Hz ~ 25KHz

CONTROL AND PROGRAMMING
- Control channels: 43CH, 55CH
- Protocol: Standard DMX512 protocol, RDM protocol, Art-Net
- Data connection: three or five core signal input/output
- RJ45 interface
- Display: LCD screen

SOFTWARE
- Upgrade software via DMX signal or USB interface
- Silent fan, three operating modes (HighOutput/Standard/Silent)
- Intelligent temperature control to ensure LED life

X/Y ANGLE OF MOTION
- X-axis: 540° 8bit/16bit precision scan
- Y-axis: 270° 8bit/16bit precision scan
- Reset function with automatic error correction
- Fixed lock: Y-axis lock

POWER
- Input voltage: AC 100-240V 50/60Hz
- Maximum power： 1400W
- Power factor: 0.996
- Maximum current of luminaire: 7A/220V; 14A / 110 V

SIZE & WEIGHT
- Lighting Size： 442×282×788mm
- N.W.： 38.0kg
- EPP Box Size： 660×560×740mm G.W.： 46.1kg
- Box Size： 520×370×870mm G.W.： 42.1kg
- EPP Flycase Size (Optional-1 set)： 700X700X880mm
- G.W.： 74.6kg
- Flycase Size (Optional-1 set)： 660X520X840mm
- G.W.： 70.5kg

OTHERS
- IP rate : IP20
- Working Ambient： 0℃~ 40 ℃
- Maximum temperature of lamp body surface: 80 ℃

STANDARDS AND CERTIFICATION
- The product implementation standard: IEC 60598-1、IEC 60598-2-17
- Approved certifications: CE、RoHs
- The product complies with the following EU directives:
  Low Voltage Directive 2014/35/EU . EMC Directive 2014/30/EU

Illumination diagram

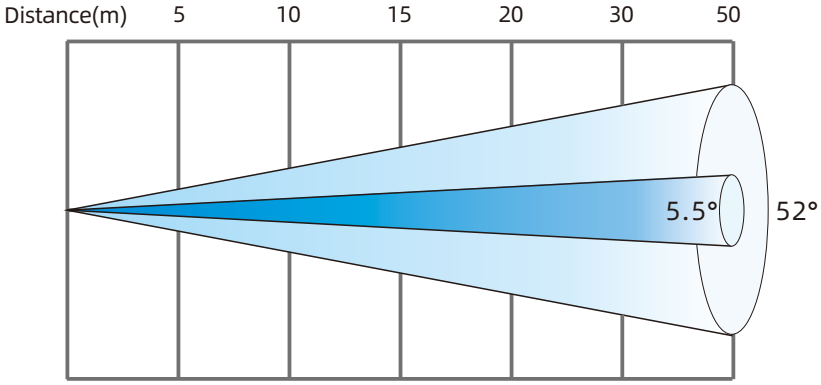

5.5° Lux	113200	28300	12600	7100	3200	1200
Diameter(m)	0.51	1.03	1.55	2.06	3.09	5.15
52° Lux	1840	460	200	110	50	20
Diameter(m)	5.04	10.08	15.12	20.16	30.24	50.4

2.1.Attachment And Size

Attachment contents-Fig.1

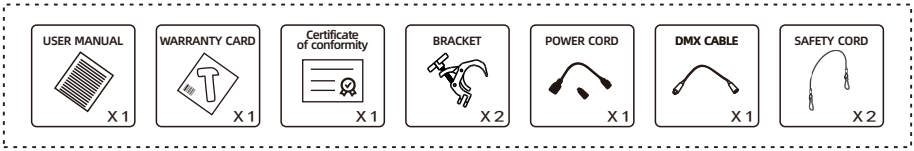

Size-Fig.2(Unit:mm)

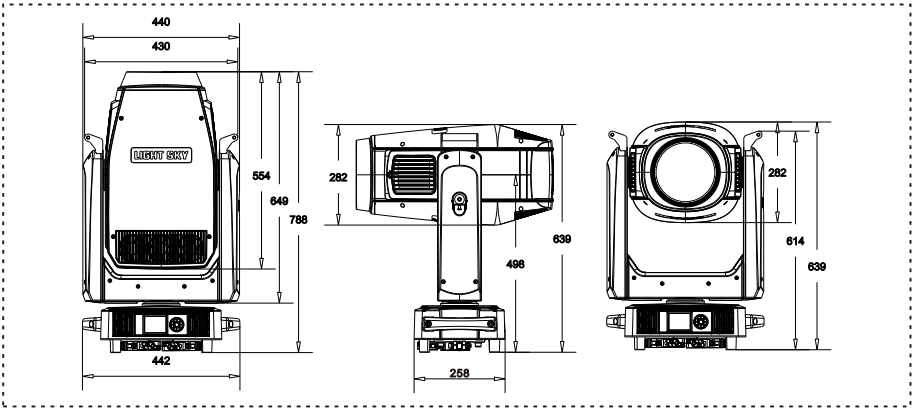

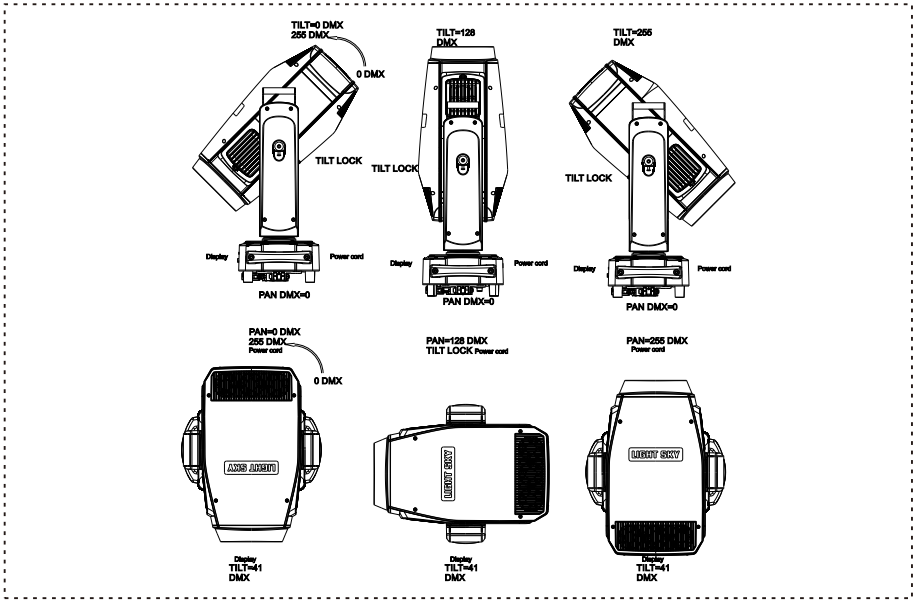

3.Color/pattern

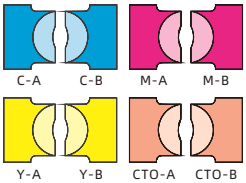

CMY

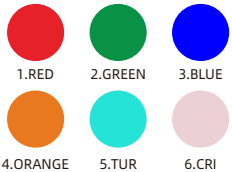

Color plate

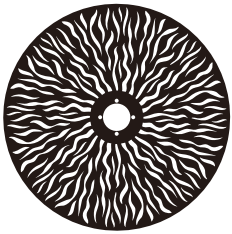

Effect disc

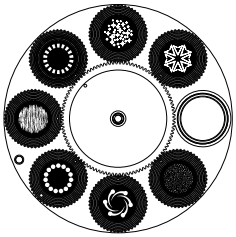

Rotating gobo wheel A

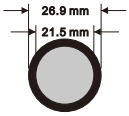

Rotation Gobo Size

Drawing Number	Part Number
FG2370A	C0700780025
FG1912C	C0700780026
FG2371A	C0700780027
FG2372A	C0700780028
FG2373A	C0700780029
FG2374A	C0700780030
FG2375A	C0700780031

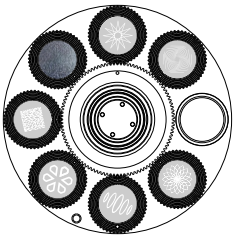

Rotating gobo wheel B

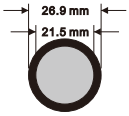

Rotation Gobo Size

Drawing Number	Part Number
FG2376A	C0700780032
FG2377A	C0700780033
FG1901E	C0700780034
FG2378A	C0700780035
FG2379A	C0700780036
FG2380A	C0700780037
FG2381A	C0700780038

DANGER! Attention: When installing GOBO chips, it is necessary to strictly follow the order of the pictures and not change the original order and direction of the GOBO chips at will.Please disconnect the power supply when installing/replacing the rotating pattern piece!

3.1.Replacing Rotating Gobos

1.Use a screwdriver to unscrew the two screws at A to take out the pattern color module assembly;

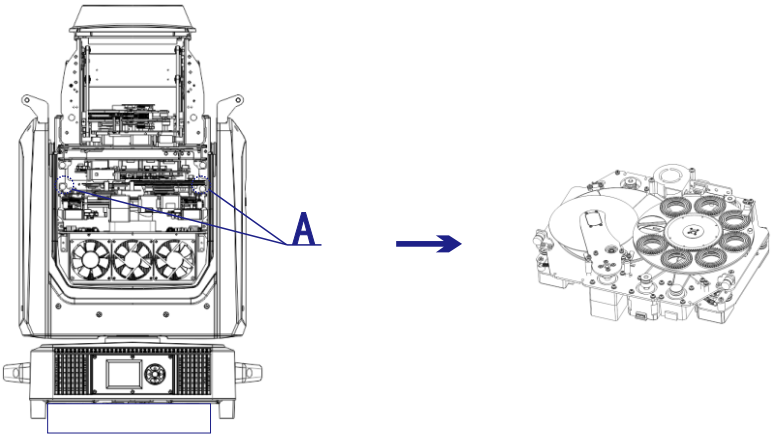

2. Reverse the assembly, and use a screwdriver to unscrew the four screws at B to separate the pattern color module from the CMY module;

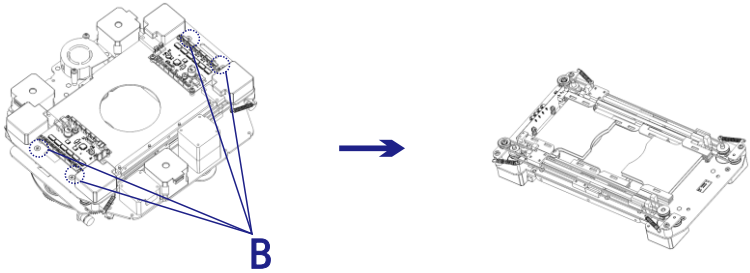

3. Use a screwdriver from the front of the pattern module to unscrew the two screws of the magnetic induction board at C, and remove the magnetic induction board; then half loosen the screws on the three motors at D, move the motor and take off the belt; turn the pattern module back Come here, unscrew the four screws at E with a screwdriver, and you can take out the rotating gobo and fixed gobo assembly (as shown in Figure F, the front is the rotating gobo, and the back is the fixed gobo)

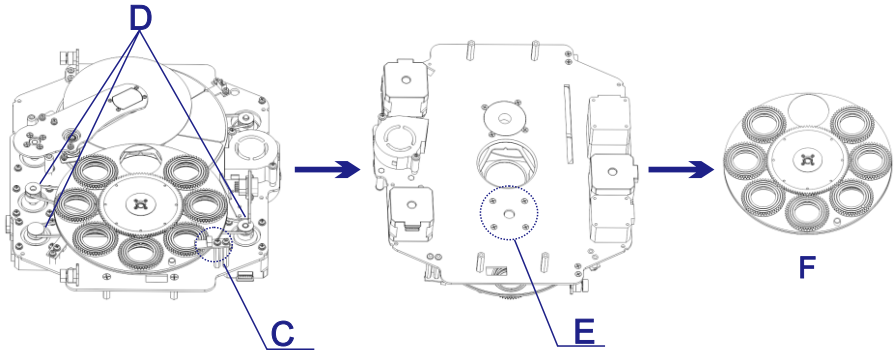

4.As shown in G, gently lift the gobo driven wheel from the edge upwards from the back of the gobo wheel and pull it out slowly to take out a single gobo;

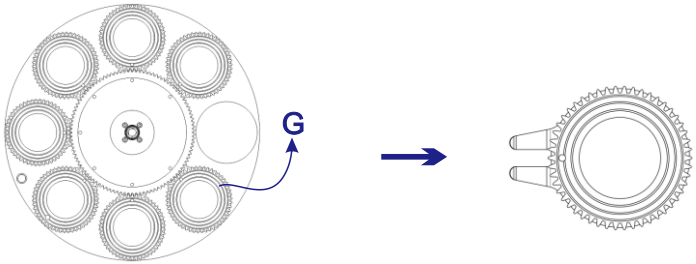

5.Take out the circlip at H with tweezers or other small objects that can be held (if the gobo is coated with glass glue for fixing, please use a professional cleaning agent to remove the glass glue and then take out the circlip to avoid damage to the gobo);

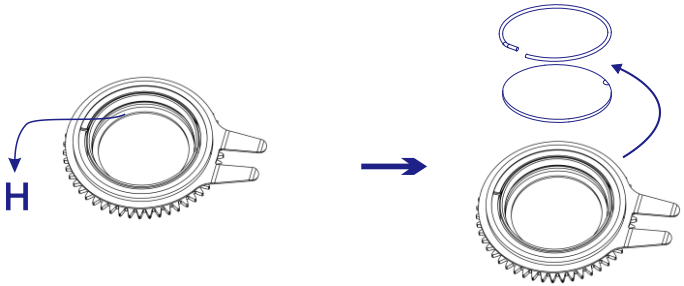

6.When assembling the gobo, avoid touching the gobo directly with your hands, and as shown in I, align the notched part of the gobo with the depression of the driven wheel assembly (the coating surface of the gobo should face the light source);

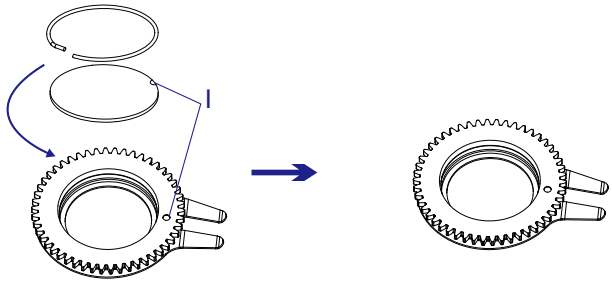

7. Insert the gobo driven wheel into the driving wheel assembly, as shown in J, the concave point of the gobo driven wheel must be positioned towards the center of the driving wheel;

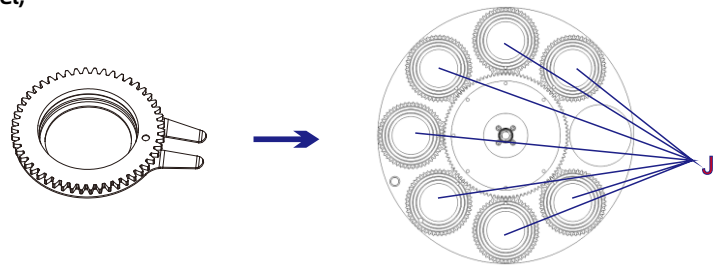

8.After installation, put the component back to the fixture.

4.Control Panel

Socket Version

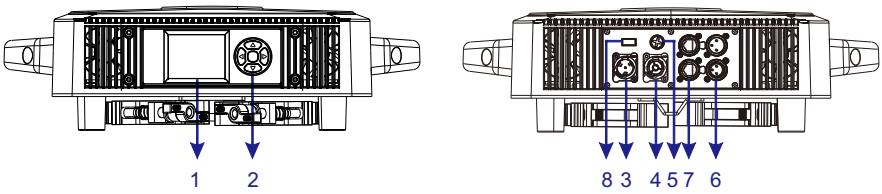

PG Version

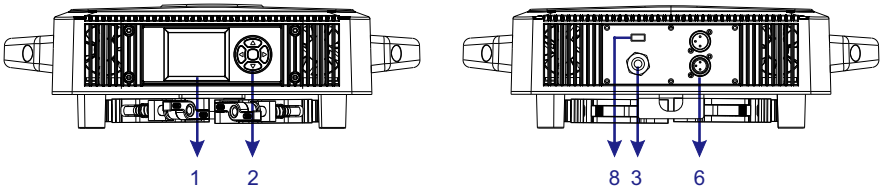

1.Display: To show the various menus and the selected function

2.Button:

●	OK confirmation key
▲	UP
▼	DOWN
◀	To the left
▶	To the right

3.Socket version power input: connect the power supply.

4.Socket version power output: Connect the lamp power output adapter（The maximum current output of the power supply shall not exceed 3.15A）.

5.Fuse holder: Used for the bottom box battery pack power supply display board when not powered on.(Note: In the case of air transportation, the lighting fixtures will require disassembly of fuses for shipment, and they must be installed by themselves upon receipt.)

6.DMX inputloutput: Used for DMX512 connection, use 3/5 core XLR signal cable toconnect console and lamps,And input/output DMX signal.

7.Art-net: The information of the lamp can be transmitted to the main controllerthrough the network cable, and the lamp can be controlled through RJ45(optional).

8.Firmware upgrade: Used to upgrade the fixture's firmware.

5.Connection and control

5.1.Power supply connection

Socket Version

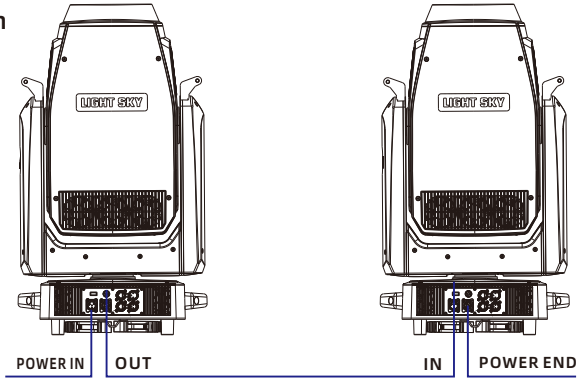

PG Version

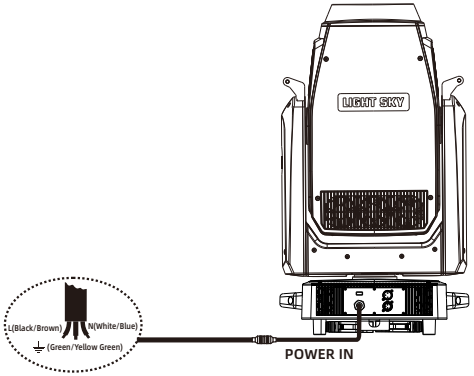

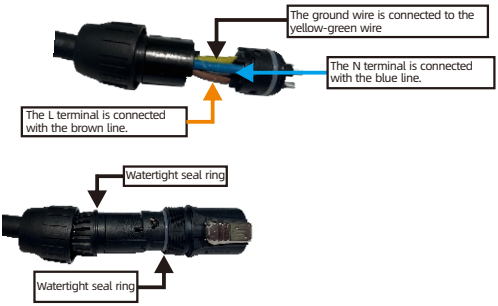

- The bus connecting the power supply must be installed by a qualified professional technician.
- After completing all the above operations and ensuring that it is installed, you can power on the lamp to operate.

5.2.DMX 512 Connection

Socket version

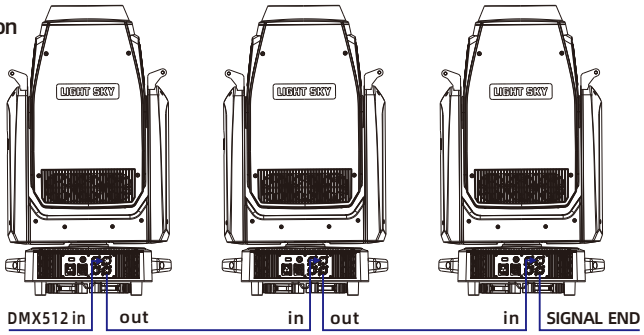

PG Version

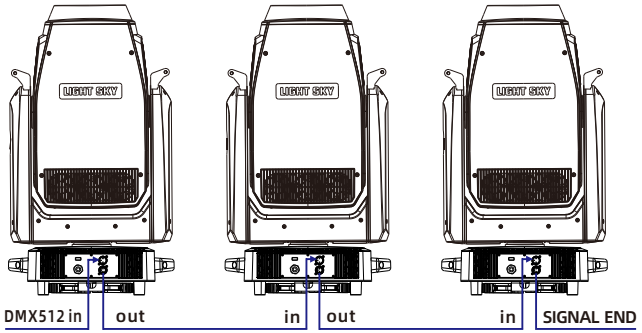

DMX-input

1- Shield
2- Signal (-)
3- Signal (+)
4- Not connected
5- Not connected

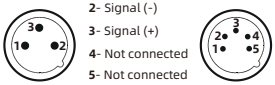

DMX - output

1- Shield
2- Signal (-)
3- Signal (+)
4- Not connected
5- Not connected

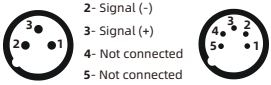

1. At last unit, the DMX cable has to be terminated with a terminator. Solder a 120 Ω 1/4W resistor between pin 2(DMX-) and pin 3(DMX+) into a 3-pin XLR-plug and plug it in the DMX-output of the last unit.
2. Connect the unit together in a "daisy chain" by XLR plug cable from the output of the unit to the input of the next unit. The cable cannot be branched or split to a "Y" cable. DMX 512 is a very high-speed signal. Inadequate or damaged cables, soldered joints or corroded connectors can easily distort the signal and shut down the system.
3. The DMX output and input connectors are pass-through to maintain the DMX circuit, when one of the units' power is disconnected.
4. Each lighting unit needs to have a DMX address to receive the data by the controller. The address number is between 1-512.
5. The end of the DMX 512 system should be terminated to reduce signal errors.
6. 3 pin XLR connectors are more popular than 5 pins XLR.
   3 pin XLR: Pin 1: GND, Pin 2: Negative signal (-), Pin 3: Positive signal (+)
   5 pin XLR: Pin 1: GND, Pin 2: Negative signal (-), Pin 3: Positive signal (+), Pin4, Pin5 not used.

6.How To Set The Unit

6.1.Main Function

Main menu	I menu	II menu	III menu	IV menu
DMX Settings	Address	1-512		
	Channel mode	Standard（43）(Default)		
		Extended（55）		
	DMX State	Black(Default)		
		Hold		
	Input mode	DMX 512(Default)		
		Art-Net		
		sACN		
Info	Fixture times	Power on time	0 - 99999H	
		LED on time	0 - 99999H	
		All time	0 - 99999H	
	Temperatures	LED TEMP		
		Drive TEMP		
	RDM info	UID:0x3888XXXXXXXX		
	DMX live	1.Pan	0 - 255	
		2.Pan fine	0 - 255	
		3.....	0 - 255	
	Version info	Display	VX.XXX	
		Pan/Tilt	VX.XXX	
		CMY module	VX.XXX	
		Gobo module	VX.XXX	
		Profile1	VX.XXX	
		Profile2	VX.XXX	
		Zoom module	VX.XXX	
		Led Fan Drv	VX.XXX	
	Fan Info	In Fan		
		Out Fan		
		Gobo Fan		
		Profile Fan		
		Focus Fan		
		In Fan1		
		In Fan2		
		In Fan3		
		Out Fan1		
		Out Fan2		
		Out Fan3		
		CMY Fan		
		Gobo Fan		
		Profile Fan		
		Focus Fan1		
		Focus Fan2		
	Pan/Tilt	PT swap	OFF	
			ON	
		Pan invert	OFF	
			ON	
		Tilt invert	OFF	
			ON	
		P/T Speed Mode	Normal(Default)	
			Fast	
			Precise	

Main menu	I menu	II menu	III menu	IIII menu
Person	Noise mode	Silent		
		Standard (Default)		
		High Output		
	Display	Language	English	
			Chinese	
		Backlight time	Always	
			Auto (30S)(Default)	
		Intensity	0 - 100	
		Rotation	Normal	
			Rotate 180	
			Auto(Default)	
	Ethernet Set	IP Address	xxx.xxx.xxx.xxx	
		Mask Address	xxx.xxx.xxx.xxx	
		Universe Address	0-32767	
		sACN Universe Add.	1-63999	
		DHCP	OFF(Default)	
			ON	
		Ethernet To DMX	OFF(Default)	
			ON	
	Dimmer Curve	Linear		
		Square(Default)		
		I-Square		
		SCurve		
	Led Preq Set	1000 Hz		
		3600 Hz		
		7200 Hz		
		25000 Hz(Default)		
	Zomm Invert Set	OFF(Default)		
		ON		
	FX Auto Focus	OFF		
		ON(Default)		
Manual	Manual Control	1.Pan	0 - 255	
		2.Pan fine	0 - 255	
		3.....	0 - 255	
	Reset	Total reset		
		Pan/Tilt reset		
		Gobo reset		
		Color reset		
		Profile reset		
		Focus reset		
		Effect reset		
Test	Test all	Testing		
	Test pan/tilt	Testing		
	Test effects	Testing		
Service	Fixture state	Memory IC	OK/Reset/ Error	
		Angle Sensor	OK/Reset/ Error	
		Pan Encodeer	OK/Reset/ Error	
		Tilt Encoder	OK/Reset/ Error	
		Pan	OK/Reset/ Error	
		Tilt	OK/Reset/ Error	
		Cyan	OK/Reset/ Error	

Main menu	I menu	II menu	III menu	IIII menu
Service	Fixture state	Magenta	OK/Reset/ Error	
		Yellow	OK/Reset/ Error	
		CTO	OK/Reset/ Error	
		Colorwheel	OK/Reset/ Error	
		Gobo1	OK/Reset/ Error	
		Gobo1 Rot.	OK/Reset/ Error	
		Gobo2	OK/Reset/ Error	
		Fram Rot.	OK/Reset/ Error	
		Zoom	OK/Reset/ Error	
		Focus	OK/Reset/ Error	
		Prism1	OK/Reset/ Error	
		Prism2	OK/Reset/ Error	
		Prism Rot.	OK/Reset/ Error	
	Adjust	Pan	0 - 255	
		Tilt	0 - 255	
		.....	0 - 255	
	Factory	Factory Reset	YES / NO	
		Reset timers	Reset power on timers	YES/NO
			Reset led timers	YES/NO
			Reset all timers	YES/NO
		Update	Simple update	Display
				Pan/Tilt
				CMY module
				Gobo module
				Framing module1
				Framing module2
				Zoom module
				LEDQD
				ALL
			Whole update	Display
				Pan/Tilt
				CMY module
				Gobo module
				Framing module1
				Framing module2
				Zoom module
				LEDQD
				ALL
		Power select	880W	
			1000W	
		Logo select		
		Fixture Type		

6.2.Channel Setting

Press the OK button to confirm, use the up/down buttons to select the channel mode: standard mode (43CH), extended mode (55CH), press the OK button to save.
Press the left/right button to return to the previous menu.

6.3.Address Setting

When using a universal DMX controller to control the fixture, you need to set the starting address (1-512)for the fixture so that the machine can receiveto the DMX signal.Select the DMX address, press the OK button to confirm, the current DMX address will be shown on the display. Use the left/right buttons to select 001~512 address, press the OK button to save.
Press the left/right button to return to the previous menu.

Please refer to the following diagram to address your DMX512 channel for the first 4 units.

Channel mode	Unit 1 Address	Unit 2 Address	Unit 3 Address	Unit 4 Address
43 Channel	1	44	87	130
55 Channel	1	56	111	166

6.4.DMX 512 Configuration

55 CHANNEL	43 CHANNEL	DMX	Function	NOTE
1	1	0-255	**Pan** Pan movement	
2	2	0-255	**Pan fine** Fine Pan positioning	
3	3	0-255	**TILT** Tilt movement/positioning	
4	4	0-255	**TILT fine** Fine Tilt movement/positioning	
5	5	0-255	**PAN TILT Speed** Pan Tilt movement Speed From Fast To Slow	
6	6		**Functions**	
		0 - 10	NO function	
		11 -- 20	All Reset	
		21 -- 30	XY Reset	
		31 -- 40	Color System Reset	
		41 -- 50	Gobo System Reset	
		51 -- 60	Profile System Reset	
		61 -- 70	Focus System Reset	
		71 -- 80	Noise mode:Super Silent	
		81 -- 90	Noise mode:Silent(Default)	
		91 -- 100	Noise mode:High Output	
		101 -- 110	Effect Reset	
		111 -- 115	LED frequency:1000HZ	
		116 -- 120	LED frequency:3600HZ	
		121 -- 125	LED frequency:7200HZ	
		126 -- 130	LED frequency:25000HZ(Default)	
		131 -- 135	Dimmer Curve:Linear	
		136 -- 140	Dimmer Curve:Square(Default)	
		141 -- 145	Dimmer Curve:I-Square	
		146 -- 150	Dimmer Curve:S-Curve	
		151 -- 155	Zoom Invert	
		156 -- 160	Zoom Forward (Default)	
		161 -- 165	Dmx state black(Default)	
		166 -- 170	Dmx state hold	
		171 -- 180	Display Back light is Always	
		181 -- 190	Display Back light is Auto(Default)	
		191 -- 200	Function Open	
		201 -- 205	FX Auto Focus On	
		206 -- 210	FX Auto Focus Off	
		211 -- 215	P/T Speed Mode:Normal	
		216 -- 220	P/T Speed Mode:Fast	
		221 -- 225	P/T Speed Mode:Precise	
		226 -- 255	NO function	
7	7	0--255	**Cyan** White→full cyan	
8	/	0--255	**Cyan Fine** Cyan Fine movement/positioning	
9	8	0--255	**Magenta** White → full magenta	

55 CHANNEL	43 CHANNEL	DMX	Function	NOTE
10	/	0--255	**Magenta Fine** Magenta Fine movement/positioning	
11	9	0--255	**Yellow** White→ full yellow	
12	/	0--255	**Yellow Fine** Yellow Fine movement/positioning	
13	10	0--255	**CTO** Color Temperature from Deep to mall	
14	/	0--255	**CTO Fine** CTO Fine movement/positioning	
15	11		**Colour wheel**	
		0 - 89	0 - 360°	
		90 - 101	OPEN	
		102 - 114	COLOR 1	
		115 - 127	COLOR 2	
		128 - 140	COLOR 3	
		141 - 153	COLOR 4	
		154 -166	COLOR 5	
		167 - 179	COLOR 6	
		180 - 214	Forwards Color rotation from slow to fast	
		215 - 249	Backwards Color rotation from fast to slow	
		250 - 255	Random color	
16	12		**Gobo**	
		0 - 9	Open	
		10-19	GOBO 1	
		20 - 29	GOBO 2	
		30 - 39	GOBO 3	
		40 - 49	GOBO 4	
		50 - 59	GOBO 5	
		60 - 69	GOBO 6	
		70-79	GOBO 7	
		80-87	Gobo 1 shake slow to fast	
		88-95	Gobo 2 shake slow to fast	
		96-103	Gobo 3 shake slow to fast	
		104-111	Gobo 4 shake slow to fast	
		112-119	Gobo 5 shake slow to fast	
		120-127	Gobo 6 shake slow to fast	
		128-135	Gobo 7 shake slow to fast	
		136-139	OPEN	
		140 - 194	Forwards gobo rotation from slow to fast	
		195 - 249	Backwards gobo rotation from fast to slow	
		250 - 255	Random Gobo	
17	13		**Gobo Rotation**	
		0 - 127	0° - 360°	
		128 - 189	Forwards gobo rotation from fast to slow	
		190 - 193	Gobo rotation sto	
		194 - 255	Backwards gobo rotation from slow to fast	
			Gobo2	
		0 - 9	Open	
		10-19	GOBO 1	
		20 - 29	GOBO 2	
		30 - 39	GOBO 3	

55 CHANNEL	43 CHANNEL	DMX	Function	NOTE
18	14	40 - 49	GOBO 4	
		50 - 59	GOBO 5	
		60 - 69	GOBO 6	
		70-79	GOBO 7	
		80-87	Gobo 1 shake slow to fast	
		88-95	Gobo 2 shake slow to fast	
		96-103	Gobo 3 shake slow to fast	
		104-111	Gobo 4 shake slow to fast	
		112-119	Gobo 5 shake slow to fast	
		120-127	Gobo 6 shake slow to fast	
		128-135	Gobo 7 shake slow to fast	
		136-139	Open	
		140 - 194	Forwards gobo rotation from slow to fast	
		195 - 249	Backwards gobo rotation from fast to slow	
		250 - 255	Random Gobo	
19	15		**Gobo2 Rotation**	
		0 - 127	0° - 360°	
		128 - 189	Forwards gobo rotation from fast to slow	
		190 - 193	Gobo rotation stop	
		194 - 255	Backwards gobo rotation from slow to fast	
20	16		**Blade1A**	
		0 - 255	Blade Out→In	
21	/		**Blade1A Fine**	
		0 - 255	Fine Blade positioning	
22	17		**Blade1B**	
		0 - 255	Blade Out→In	
23	/		**Blade1B Fine**	
		0 - 255	Fine Blade positioning	
24	18		**Blade2A**	
		0 - 255	Blade Out→In	
25	/		**Blade2A Fine**	
		0 - 255	Fine Blade positioning	
26	19		**Blade2B**	
		0 - 255	Blade Out→In	
27	/		**Blade2B Fine**	
		0 - 255	Fine Blade positioning	
28	20		**Blade3A**	
		0 - 255	Blade Out→In	
29	/		**Blade3A Fine**	
		0 - 255	Fine Blade positioning	
30	21		**Blade3B**	
		0 - 255	Blade Out→In	
31	/		**Blade3B Fine**	
		0 - 255	Fine Blade positioning	
32	22		**Blade4A**	
		0 - 255	Blade Out→In	
33	/		**Blade4A Fine**	
		0 - 255	Fine Blade positioning	
34	23		**Blade4B**	
		0 - 255	Blade Out→In	
35	/		**Blade4B Fine**	
		0 - 255	Fine Blade positioning	

55 CHANNEL	43 CHANNEL	DMX	Function	NOTE
36	24	0 - 255	**Framing Rotation** 0° - 110°	
37	25	0 -- 10 11 -- 20 21 -- 30 31 -- 40 41 -- 50 51 -- 60 61 -- 70 71 --80 81 --90 91 --100 101--110 111--120 121--130 131--140 141--150 151--160 161--170 171--180 181--190 191--200 201--255	**Framing Macro** No function Square rectangle Isosceles triangle trapezoidal The Fan(Facing Up) parallelogram Right Angle trapezoid The Fan(Down) triangle prismatic The stripes bar Upper left quadrant semicircle（Up） Upper right quadrant Right semicircle Right lower quadrant Semicircle（Down） The lower left quadrant Left Semicircle	
38	26	0 - 255	**Framing Macro Zoom** Framing Macro Zoom	
39	27	0 - 10 11-100 101-190 191-255	**Prism** Prism Out Prism 1 Prism 2 Prism 1&2	
40	28	0 1--63 64-127 128-191 192-207 208-223 224-239 240-255	Prism Rotation No Function 0--360° Forwards rotation from fast to slow Backwards rotation from slow to fast from slow to fast 90°Swing from slow to fast 180°Swing from slow to fast 270°Swing from slow to fast 360°Swing	
41	29	0 - 9 10 - 239 240 - 255	**Effect** Effect Out Effect In Effect In&Shake	
42	30	0 - 2 3 - 130 131 - 255	**Effect Rotation** No Function Forwards rotation from fast to slow Backwards rotation from fast to slow	
43	31	0 - 127 128 - 159 160 - 191	**Frost1** Frost From Min To Max No Function No Function	

55 CHANNEL	43 CHANNEL	DMX	Function	NOTE
		192 - 255	No Function	
44	32		**Frost2**	
		0 - 127	Frost From Min To Max	
		128 - 159	No Function	
		160 - 191	No Function	
		192 - 255	No Function	
45	33		**Iris**	
		0 - 127	From Max To Min	
		128 - 159	Slow In Fast Out from slow to fast	
		160 - 191	Fast In Slow Out from slow to fast	
		192 - 255	Slow In Slow Out from slow to fast	
46	34		**Zoom**	
		0 - 255	WIDE BEAM→NARROW BEAM	
47	35		**ZoomFine**	
		0 - 255	Fine Zoom positioning	
48	36		**Focus**	
		0 - 255	Infinity	
49	37		**Focus Fine**	
		0 - 255	Fine Focus positioning	
50	38		**Autofocus Distance**	
		0 - 9	NO function	
		10 -- 19	7M	
		20 -- 29	10M	
		30 -- 39	15M	
		40 -- 49	20M	
		50 -- 59	25M	
		60 - 69	30M	
		70 - 79	40M	
		80 -- 255	50M	
51	39		**Autofocus Adjustment**	
		0-255	Auto Focus Fine	
52	40		**Strobe**	
		0-9	No Function	
		10-49	Closing pulses in sequences from fast to slow	
		50-89	Opening pulses in sequences from fast to slow	
		90-119	No Function	
		120 - 179	Random strobe,slow → fast	
		180-255	Strobe,slow → fast	
53	41		**Dimmer**	
		0 - 255	Dimmer from Dark To Bright	
54	42		**Dimmer Fine**	
		0 - 255	Dimmer Fine	
55	43		**Gobo Macro**	
		0-15	No Function	
		16-255	Gobo Macro Function	

7.Electrical Connection Diagram

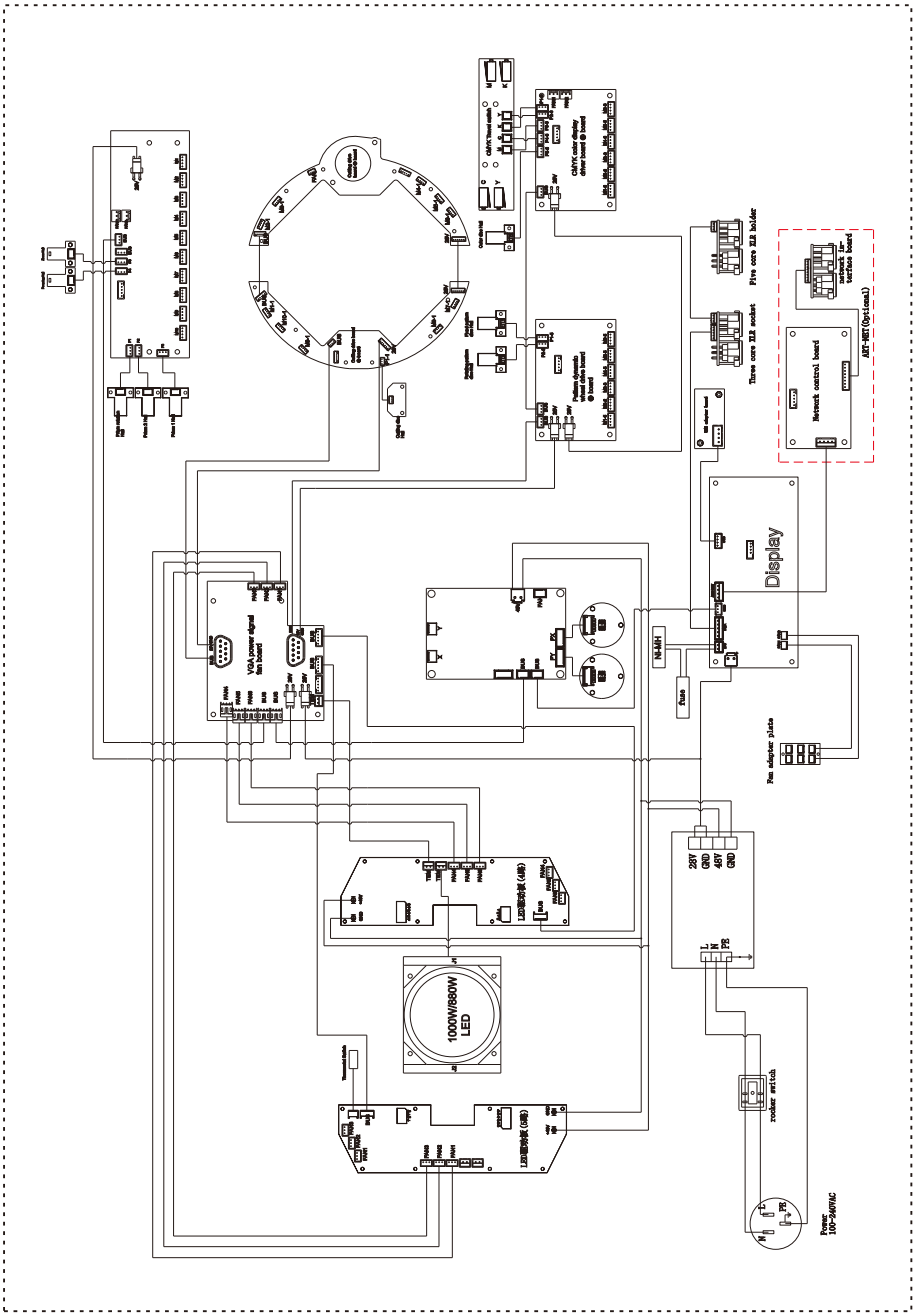

8.Troubleshooting

The following are common faults of lamps and corresponding solutions. Faults that cannot be repaired by yourself should be handled by professionally qualified personnel. Disconnect the power supply to the lamp during maintenance!

● The light source is not bright
- Check that a suitable light source is installed for the luminaire.
- Check whether the power supply connection of the lamp or the control switch is in poor contact.
- Check whether the light source has reached the end of its service life or is damaged, and replace it with a high-quality light source of the same specification.
- Measure whether the power supply is insufficient.
- Check whether the light source has not cooled down completely due to abnormal operation. Let the lamp cool down for more than 15 minutes to allow the light source to cool down. After returning to the normal start-up range, turn the power on again and it can be used normally.
- Check whether the DMX512 controller sends a command to turn on the light source.
- Check whether the light source and trigger circuit are disconnected or defective.
- Check whether the wiring terminals on the internal trigger are in poor contact and tighten the plug.
- Check the "Fan Speed and Voltage" in the "Basic Information" menu to see if the speed of FAN1/FAN2/FAN3 is above 500RPN. If it is below 500RPM, the light source will not light up. Replace the fan with the same specification.
- Check whether the over-temperature protection temperature switch inside the lamp is damaged. Go to the menu "Basic Information" and select "Equipment Temperature" to check - whether the temperature measuring plate shows that the temperature is too high or there is no temperature display.

● The beam appears dim and uneven
- The light source may have reached the end of its service life and does not emit enough light. Replace it with a light source of the same specification.
- Check whether there is dust accumulated in the optical part and clean it.
- Measure whether the power supply is insufficient.
- Finely adjust the screw device used to change the height of the lamp until the ideal light is achieved. Enter the menu "Service Options" and select "Calibration" to enter color and pattern adjustment, which can be adjusted to the center.

● The projected image is blurry
- Check whether the DMX512 controller channel value corresponding to the electronic focus system is suitable for the current projection distance.
- Check whether the mechanical part of the focusing system is stuck, remove the dust and add antifreeze and temperature-resistant lubricating oil.

● The light source of the lamp works intermittently
- Check whether the fan is running normally or is blocked by dust and paper debris.
- Check whether the inlet and outlet cooling air vents are blocked by dust.
- Check whether the lamp has reached the end of its service life.

- Check whether the power supply is insufficient, and whether the power switch and wiring are in poor contact or aging.
- Check whether the over-temperature protection temperature switch inside the lamp is damaged.

● Although it emits light, the lamp does not accept instructions from the controller

- Check whether the digital start address value and function options of the lamp are correct.
- Check whether the connection of the communication control line is correct. The communication line is too long or has been interrupted.
- Check whether the control equipment fails and whether the signal amplifier connected in series fails.
- Check whether the communication line is too long or if other devices interfere with each other.
- Optimize wiring, shorten the length of control signal lines, and route high-voltage and low-voltage lines separately
- Add signal amplifier isolator.
- The signal line is made of high-quality shielded twisted pair (impedance characteristic is 75Ω), and the signal terminal resistor is connected at the end of the lamp.
- Check that the circuit board communication IC or CPU is burned out because the bulb performs an abnormal operation when it is not completely cooled, causing the instantaneous ultra-high voltage leakage generated by the trigger, and replace the PCB board.

● The lamp cannot be started

- Check whether the power supply parameters match the lamps.
- Check whether the fuse at the light fixture's power input is blown.
- Check that the lamp has poor contact or falls off due to extrusion deformation, vibration of internal parts, moisture, etc. during long-distance transportation.
- Check whether the internal wires and connectors of the lamp are desoldered or loose.
- Check whether the electrical components of the lamp (such as power switch, transformer, ballast, capacitor, varistor, filter, power supply PCB board, motor control PCB board, etc.) are loose, short-circuited, burned out, etc.

● Some functions of the lamp cannot accept controller instructions

- Check whether the control device sends correct action instructions for these functions.
- Check whether the mechanical parts corresponding to these functions are loose or deformed.
- Check whether the motor sockets corresponding to these functions are loose or the corresponding driver chips are burned out.
- Check whether the motor wires corresponding to these functions are broken at the corners.
- Check whether the motors corresponding to these functions are damaged.

● During operation, the x or Y direction of the lamp does not move normally

- Click the previous step to check one by one.
- Check whether the corresponding drive belts in the X and Y directions of the lamp are detached or broken.
- Check whether the data feedback receiver (photoelectric sensor) corresponding to the X and Y directions in the lamp is damaged.
- Restart the computer and reset it once.

9.Fixture Cleaning

It is absolutely essential that the fixture is kept clean to ensure the maximum light-output and allow the fixture to function reliably throughout its life. The fixture must be cleaned regularly to avoid dust, dirt and smoke-fluid residues building up on or within the fixture. The cleaning frequency depends on the application environment. Clean the fixture immediately if the dust enters it to avoid damage to the optical lens due to excessive dust.

- A soft lint-free cloth moistened with any good glass cleaning fluid is recommended, under no circumstances should solvents be used.
- Always dry the parts carefully.
- Clean the external optical lens at least every 20 days and the internal optical lens every 30 days.



CAUTION ! ! !

Disconnect from mains before starting maintenance operation.

10.Duty exonerative and copyright protectio

- The manufacturer shall not bear any responsibility for any damage caused by failure to operate in accordance with this instruction.
- All the information in this manual shall be interpreted by the manufacturer.
- All the information in this manual shall not be copied without permission.
- The data contained in this statement are subject to change in the future without prior notice.